SD-419, KT-419

Standard AD board & kit for LCD display

Features

- HDMI 1.4 / HDCP 1.3 input
- Flexible, low cost and high performance
- For industrial, kiosk, gaming, digital signage application
- For LCD panel with LVDS interface
- Support 8 bits 16.7M true colors
- Dual channel stereo audio with 8 ohm 2W x 2
- Optional IIC interface for light sensor
- Optional UART interface for remote control

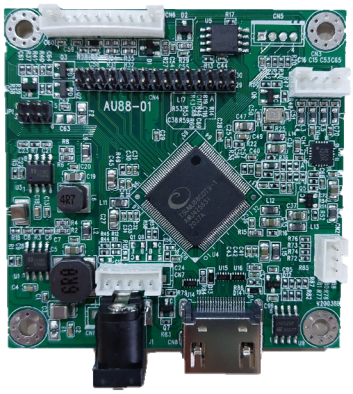

Specifications

Video	Hor. Frequency	30 ~ 94 KHz
	Ver. Frequency	48 - 75 Hz
	Resolution	1920x1080 @60Hz
	Pixel rate (LVDS)	135MHz for single
		210MHz for dual
	Plug & Play	DDC/CI
Colors	8 bits 16.7M true color	
	9300K, 7500K, 6500K, user mode	
OSD adjustment	Power, Menu, R, L, Auto	
	Multi-languages	
Temperature	Operation	0 ~ 50 degree C
	Storage	-40 ~ 70 degree C

Input	HDMI connector	HDMI v1.4,
	Optional DC input	4pin 2.0mm wafer
Power	DC input *	12 Vdc/0.15A/2.0D
	Consumption	< 1.8W
	Power saving	< 0.7W
	Management	VESA DPMS
	Panel selection	3.3V / 5V / 12V
	Auxiliary o/p	
Dimension	65 (L) x 65 (W) x 12 (H) mm	
	Packing quantity	100 pcs / carton
Agency	FCC / CE compliance	

* Changeable to 2.5mm diameter DC jack.

Ordering information

- Kit accessory :
  1). OSD board 2). OSD wire
- Selected options :
  1). LVDS wire 2). LED wire 3). HDMI cable
  4). LED controller 5). Power adapter 6). Speaker
  7). Power cord 8). UART-to-RS232 board

Product drawing

AD board

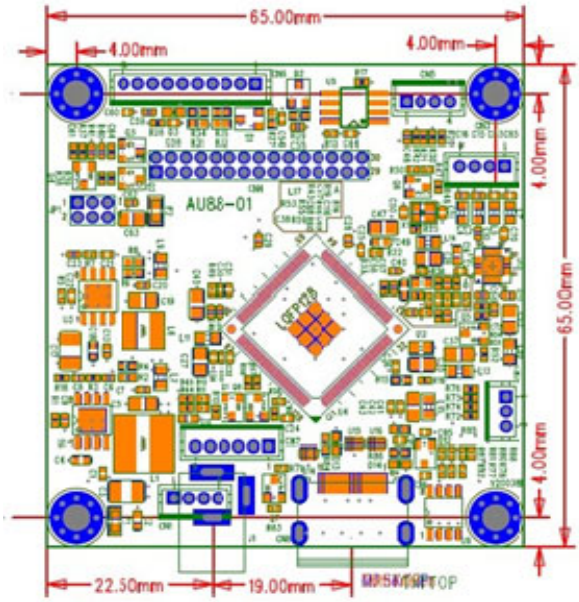

OSD board

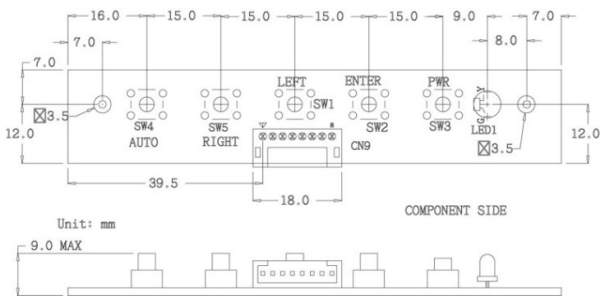

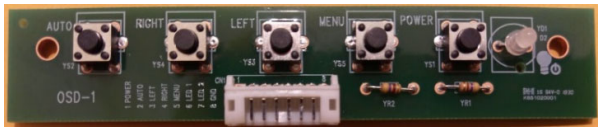

* All specification and photos are subject to change without notice.